Michigan Pneumatic Tool, Inc.

MP-TPB40-C 1" x 4-1/4" 40 lb Pavement Breaker

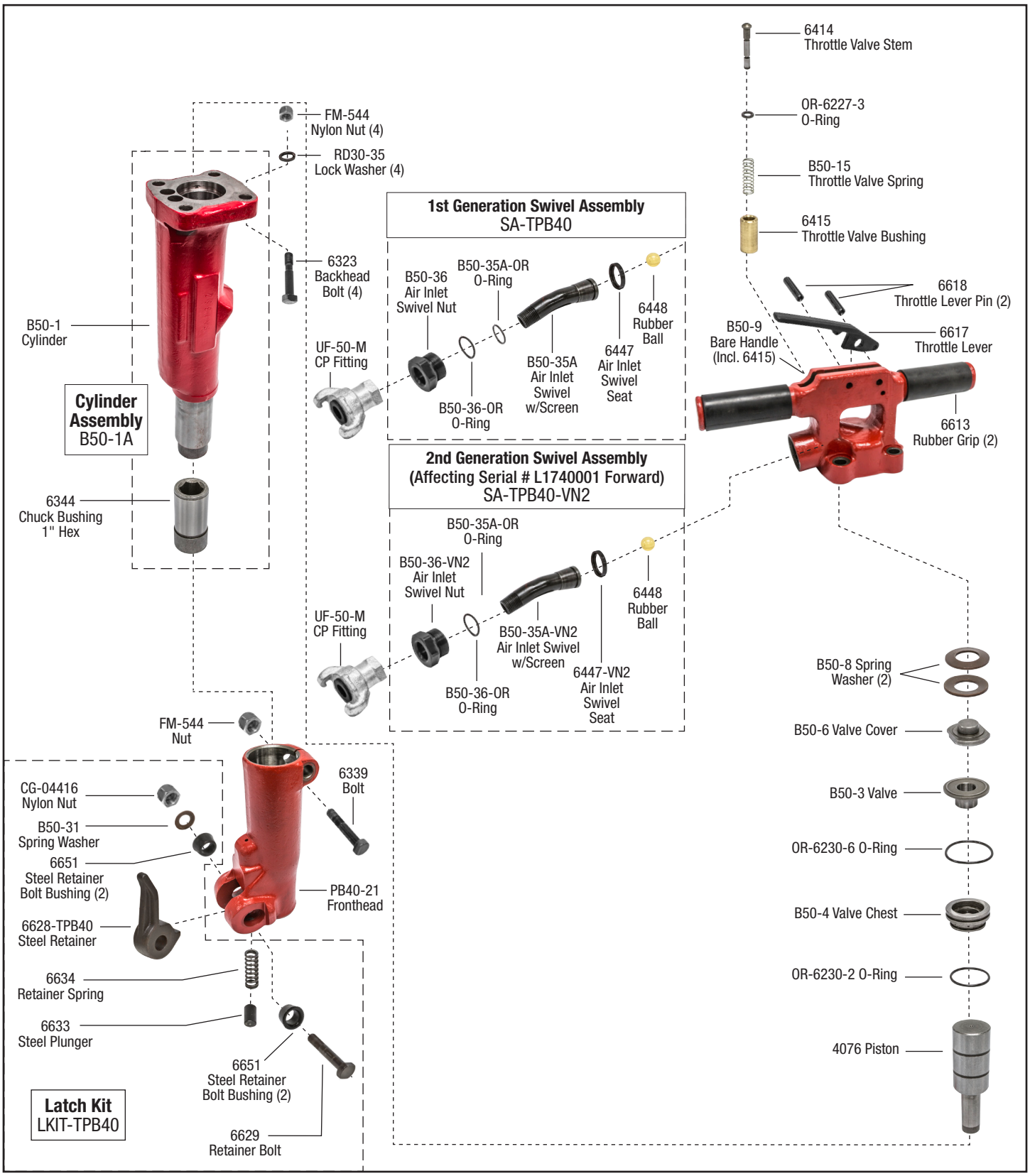

6850 Middlebelt Rd. • Romulus, MI 48174 • **1-800-521-8104** • Ph: (313) 933-5890 • Fax: (313) 933-0440
www.michiganpneumatic.com • e-mail: mpt@michiganpneumatic.com