NPK® NIPPON PNEUMATIC MFG.CO,.LTD

NHG-65LDLW

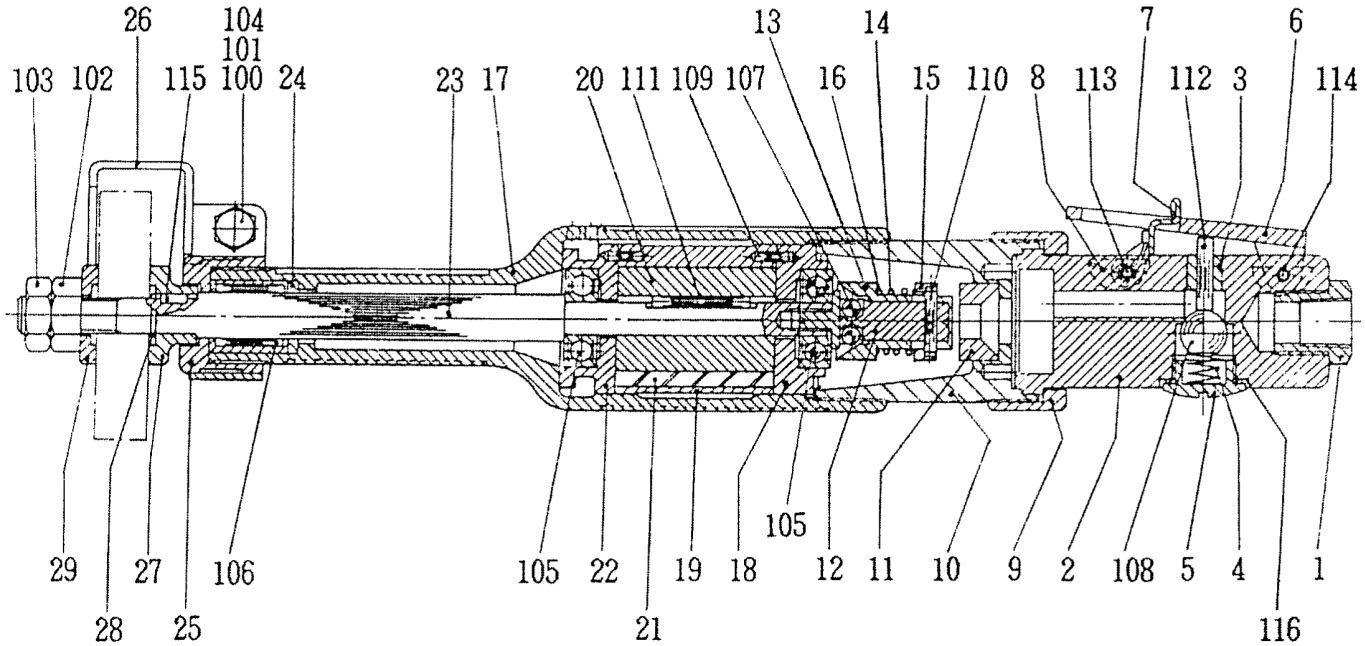

Index	Part No.	Description	Qty.
1	15204220	Inlet Bushing	1
2	15005500	Handle	1
3	15005480	Throttle Bush	1
4	15102340	Throttle Spring	1
5	15005490	Throttle Plug	1
6	15005510	Lever	1
7	15005520	Stopper	1
8	15008230	Stopper Spring	1
9	15003560	Lock Nut	1
10	15003360	Air Connector	1
11	15003110	Governor Bush	1
12	15003100	Governor Body	1
13	15003090	Governor Valve	1
14	15003080	Governor Spring	1
15	15003120	Governor Washer	1
16	15003280	Thin Washer	1
17	15003380	Rotor Case	1
18	15003180	Top Plate	1
19	15003170	Cylinder	1
20	15003210	Rotor	1
21	15003190	Vane	4
22	15003200	Bottom Plate	1
23	15003390	Stone Spindle	1

Index	Part No.	Description	Qty.
24	15003260	Bearing Washer	1
25	15003240	Spindle Nut	1
26	15003160	Stone Cover	1
27	15003140	Stone Flange	1
28	15003270	Stopper Ring	1
29	15003150	Stone Washer	1
100	72206018	Hex Bolt	1
101	76111206	Hex Nut	1
102	28100380	Hex Nut	1
103	28100387	Hex Nut	1
104	76310206	Washer	1
105	28201072	Ball Bearing	2
106	28203074	Needle Bearing	1
107	28205026	Steel Ball	3
108	28205051	Rubber Pin	1
109	28206036	Pin	2
110	28207061	Roller Pin	1
111	28207067	Roller Pin	1
112	28207223	Roller Pin	1
113	28208061	Spring Pin	1
114	25305020	Spring Pin	1
115	28209010	Key	1
116	61200120	O-Ring	1