S1 Single Piston Scaler

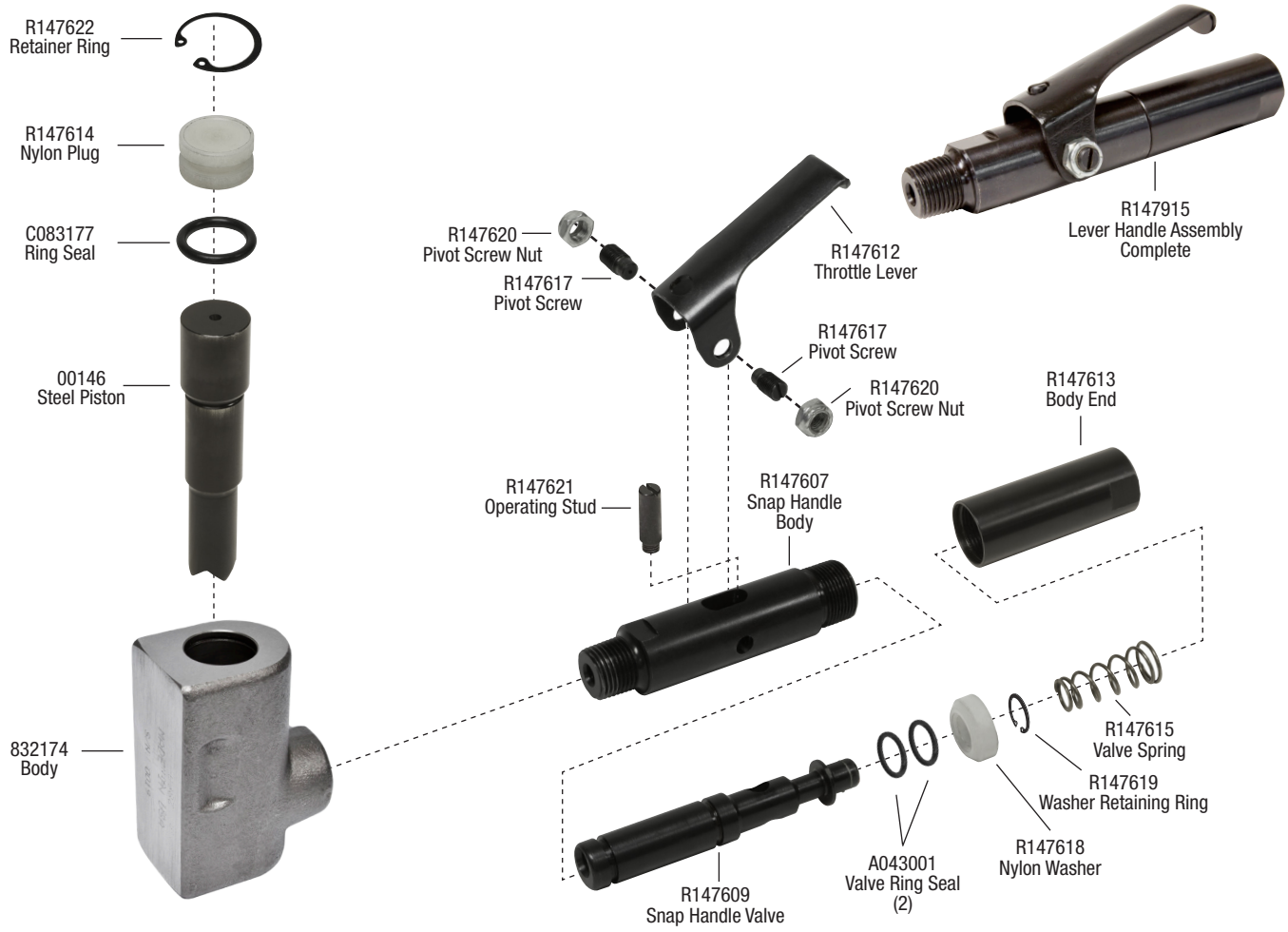

00146
Steel Piston
To clean heavy scale, rust and paint from metal surfaces

R145921
Carbide Tipped Piston
Ideal for surfacing of concrete

1084145
Cobalt Steel Tip Piston
Ideal for removing coatings from underground pipe. Reduces spark and or low temp spark